ESP32_MCU

File: ESP32_MCU.kicad_sch

PROX_SENSE_LEVEL_SHIFT

File: PROX_SENSE_LEVEL_SHIFT.kicad_sch

PROX_SENSE

File: PROX_SENSE.kicad_sch

BOOSH_TRIGGER

File: BOOSH_TRIGGER.kicad_sch

POWER

File: POWER.kicad_sch

CONNECTORS

File: CONNECTORS.kicad_sch

Sheet: /		
File: high_striker_boosh.kicad_sch		
Title: HIGH STRIKER BOOSH		
Size: A4	Date:	**Rev:**
KiCad E.D.A. 8.0.0		Id: 1/7

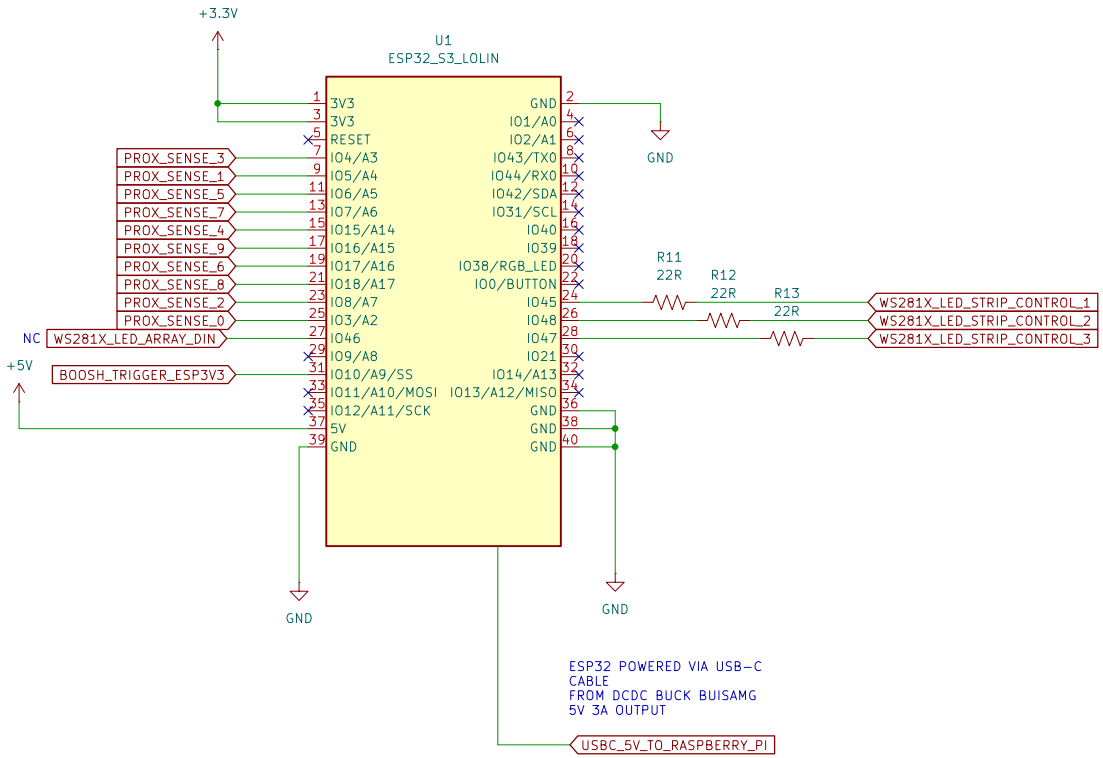

Sheet: /ESP32_MCU/
File: ESP32_MCU.kicad_sch

Title:

Size: A4	Date:	**Rev:**
KiCad E.D.A. 8.0.0		Id: 2/7

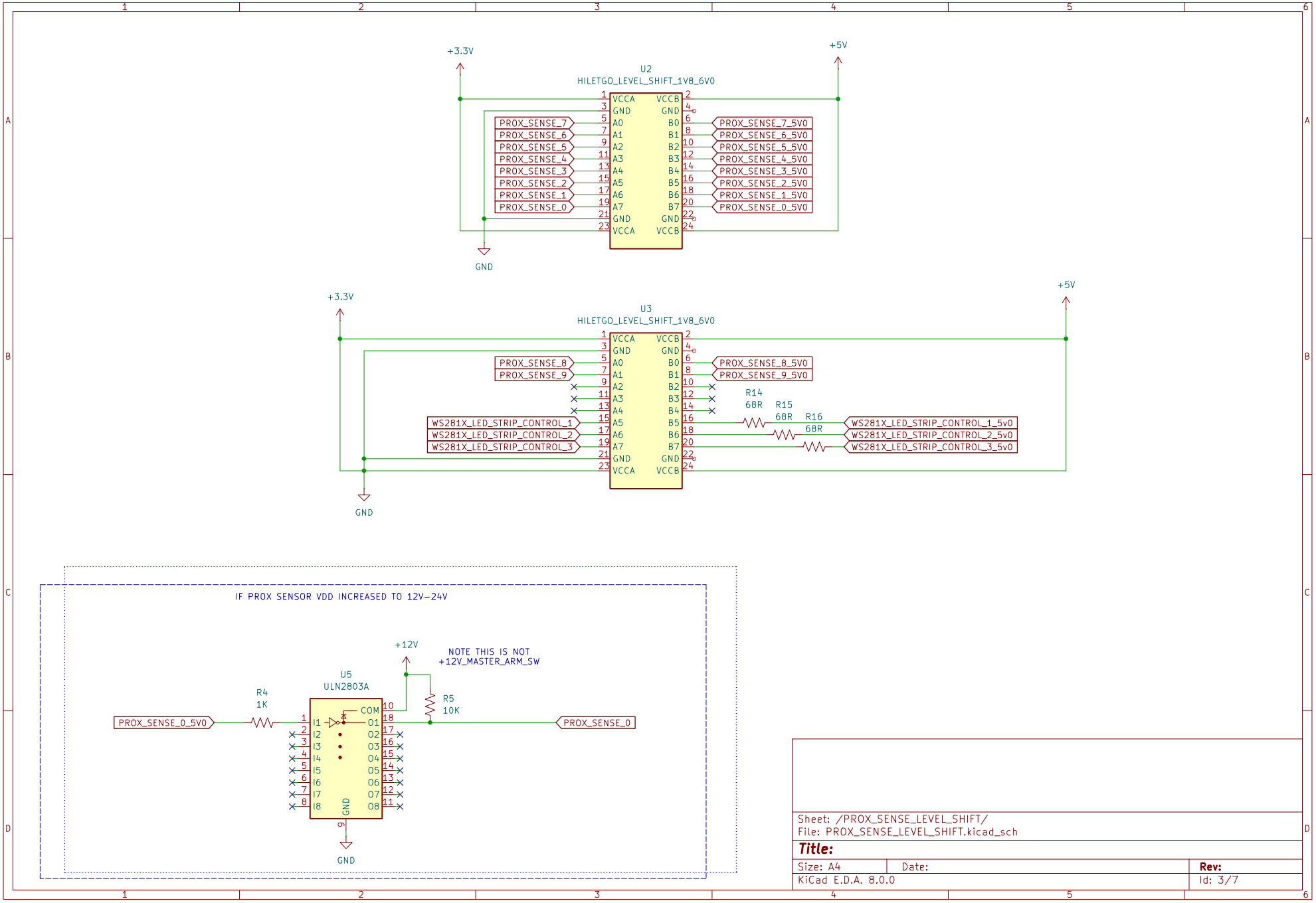
+3.3V
+5V
U2
HILETGO_LEVEL_SHIFT_1V8_6V0
VCCA
GND
A0
A1
A2
A3
A4
A5
A6
A7
GND
VCCA
VCCB
GND
B0
B1
B2
B3
B4
B5
B6
B7
GND
VCCB
PROX_SENSE_7
PROX_SENSE_6
PROX_SENSE_5
PROX_SENSE_4
PROX_SENSE_3
PROX_SENSE_2
PROX_SENSE_1
PROX_SENSE_0
PROX_SENSE_7_5V0
PROX_SENSE_6_5V0
PROX_SENSE_5_5V0
PROX_SENSE_4_5V0
PROX_SENSE_3_5V0
PROX_SENSE_2_5V0
PROX_SENSE_1_5V0
PROX_SENSE_0_5V0
GND
+3.3V
+5V
U3
HILETGO_LEVEL_SHIFT_1V8_6V0
PROX_SENSE_8
PROX_SENSE_9
PROX_SENSE_8_5V0
PROX_SENSE_9_5V0
R14
68R
R15
68R
R16
68R
WS281X_LED_STRIP_CONTROL_1
WS281X_LED_STRIP_CONTROL_2
WS281X_LED_STRIP_CONTROL_3
WS281X_LED_STRIP_CONTROL_1_5v0
WS281X_LED_STRIP_CONTROL_2_5v0
WS281X_LED_STRIP_CONTROL_3_5v0
GND
IF PROX SENSOR VDD INCREASED TO 12V-24V
+12V
NOTE THIS IS NOT
+12V_MASTER_ARM_SW
U5
ULN2803A
R4
1K
R5
10K
PROX_SENSE_0_5V0
PROX_SENSE_0
COM
I1
I2
I3
I4
I5
I6
I7
I8
O1
O2
O3
O4
O5
O6
O7
O8
GND
GND
Sheet: /PROX_SENSE_LEVEL_SHIFT/
File: PROX_SENSE_LEVEL_SHIFT.kicad_sch
Title:
Size: A4
Date:
Rev:
KiCad E.D.A. 8.0.0
Id: 3/7

Inductive proximity sensor LJ12A3-4-Z/BX (NPN, Normally Open)

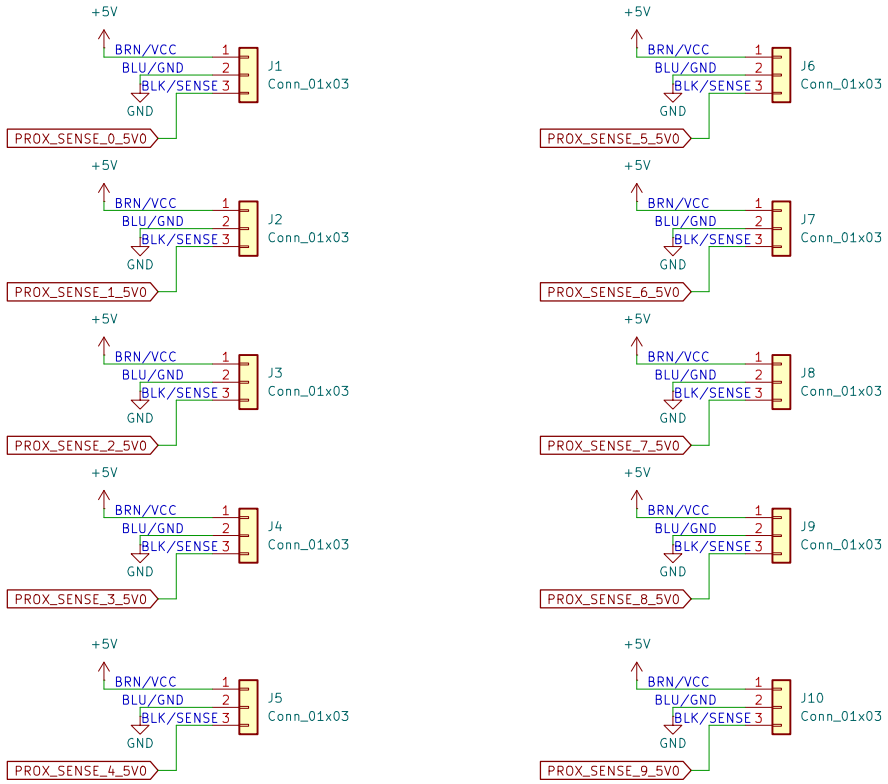

Sheet: /PROX_SENSE/
File: PROX_SENSE.kicad_sch

Title:

Size: A4	Date:	**Rev:**
KiCad E.D.A. 8.0.0		Id: 4/7

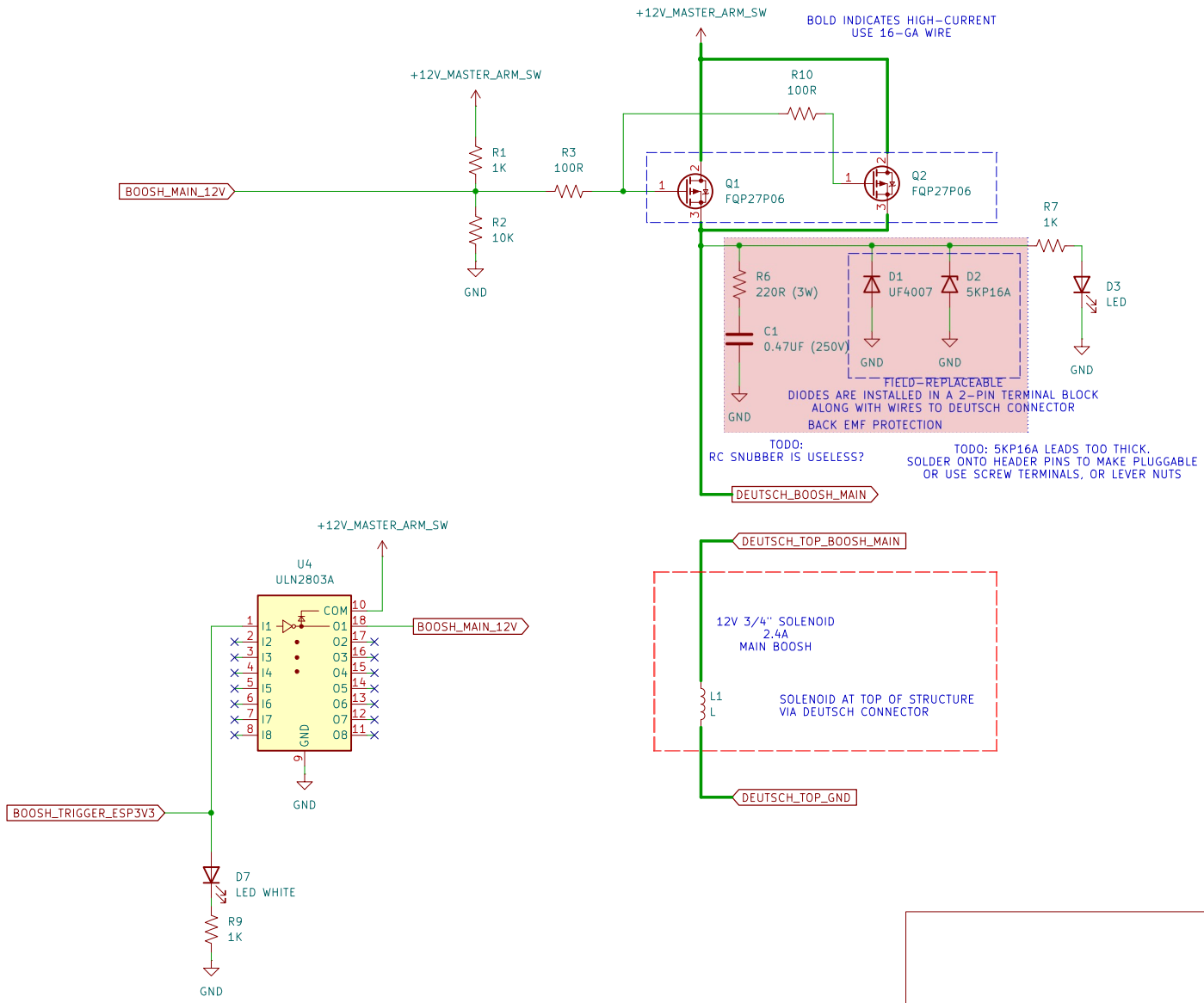

Sheet: /BOOSH_TRIGGER/
File: BOOSH_TRIGGER.kicad_sch

Title:

Size: A4	Date:	**Rev:**
KiCad E.D.A. 8.0.0		Id: 5/7

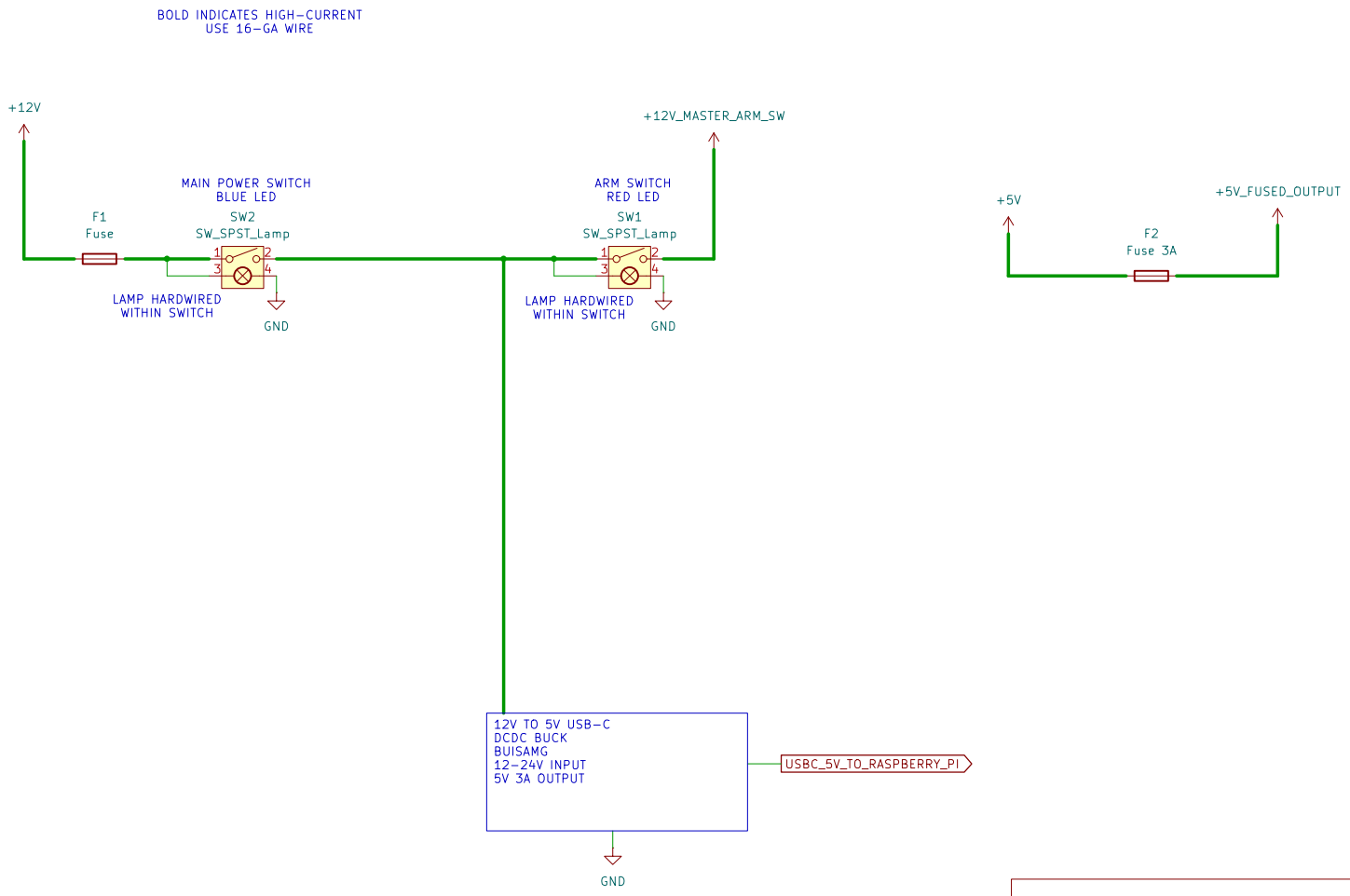

Sheet: /POWER/
File: POWER.kicad_sch

Title:

Size: A4	Date:	**Rev:**
KiCad E.D.A. 8.0.0		Id: 6/7

12-PIN AND 8-PIN DEUTSCH CONNECTORS

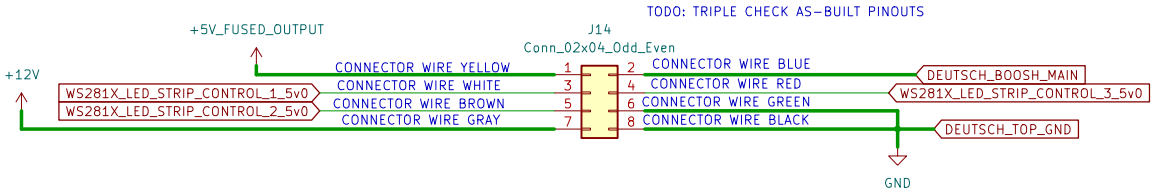

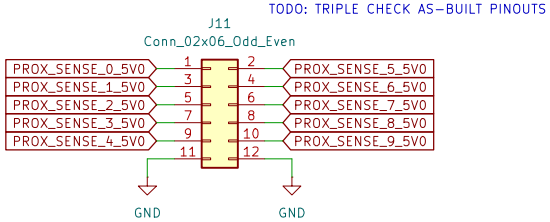

Sheet: /CONNECTORS/
File: CONNECTORS.kicad_sch

Title:

Size: A4	Date:	**Rev:**
KiCad E.D.A. 8.0.0		Id: 7/7